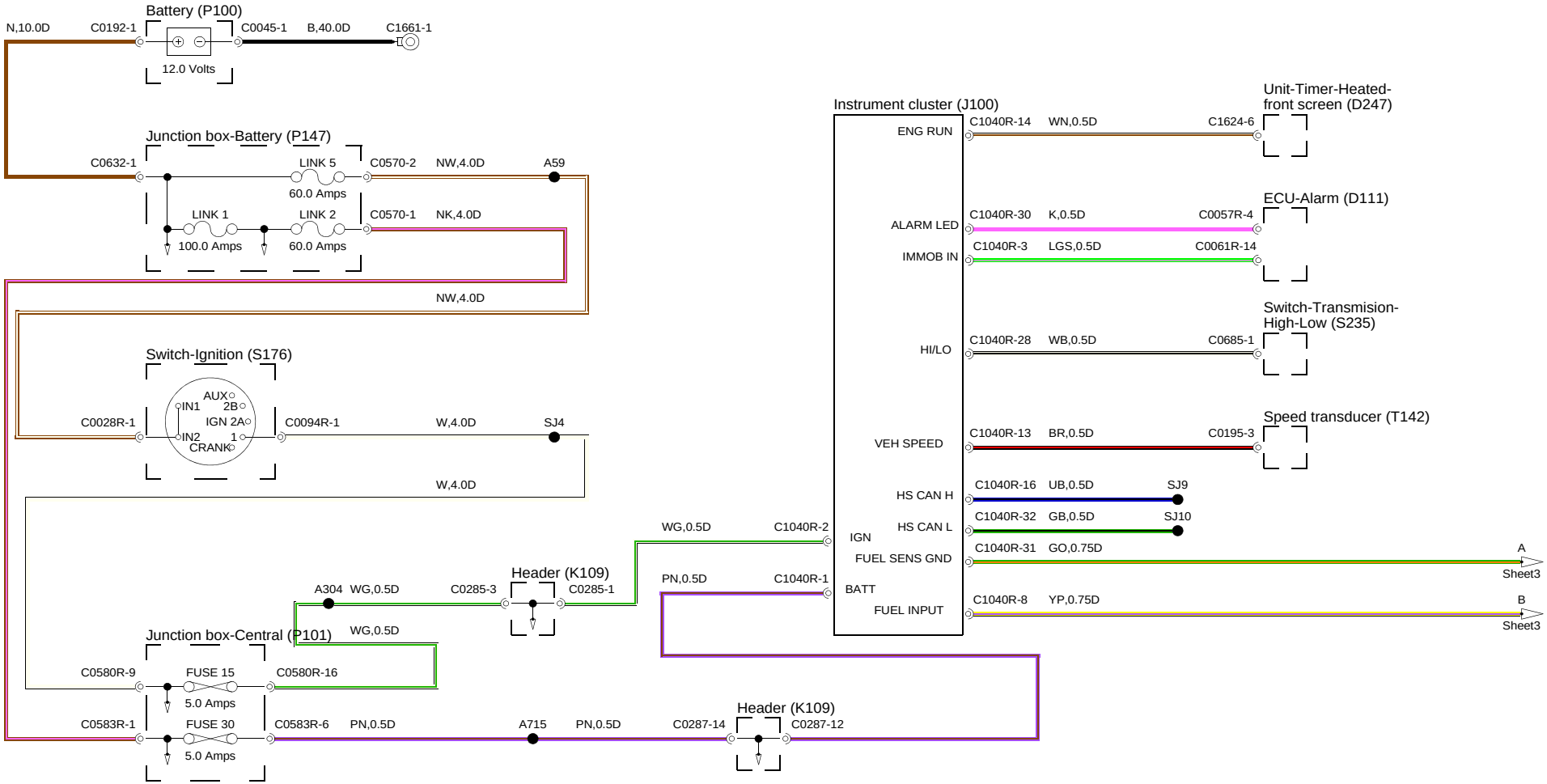
Battery (P100)
N,10.0D
C0192-1
C0045-1
B,40.0D
C1661-1
12.0 Volts
Junction box-Battery (P147)
C0632-1
LINK 5
60.0 Amps
C0570-2
NW,4.0D
A59
LINK 1
100.0 Amps
LINK 2
60.0 Amps
C0570-1
NK,4.0D
NW,4.0D
Switch-Ignition (S176)
AUX
IN1
2B
IGN 2A
IN2
1
CRANK
C0028R-1
C0094R-1
W,4.0D
SJ4
W,4.0D
Instrument cluster (J100)
ENG RUN
C1040R-14
WN,0.5D
C1624-6
Unit-Timer-Heated-front screen (D247)
ALARM LED
C1040R-30
K,0.5D
C0057R-4
ECU-Alarm (D111)
IMMOB IN
C1040R-3
LGS,0.5D
C0061R-14
HI/LO
C1040R-28
WB,0.5D
C0685-1
Switch-Transmision-High-Low (S235)
VEH SPEED
C1040R-13
BR,0.5D
C0195-3
Speed transducer (T142)
HS CAN H
C1040R-16
UB,0.5D
SJ9
HS CAN L
C1040R-32
GB,0.5D
SJ10
IGN
FUEL SENS GND
C1040R-31
GO,0.75D
A
Sheet3
BATT
FUEL INPUT
C1040R-8
YP,0.75D
B
Sheet3
WG,0.5D
C1040R-2
PN,0.5D
C1040R-1
Header (K109)
A304
WG,0.5D
C0285-3
C0285-1
Junction box-Central (P101)
WG,0.5D
C0580R-9
FUSE 15
5.0 Amps
C0580R-16
C0583R-1
FUSE 30
5.0 Amps
C0583R-6
PN,0.5D
A715
PN,0.5D
C0287-14
Header (K109)
C0287-12

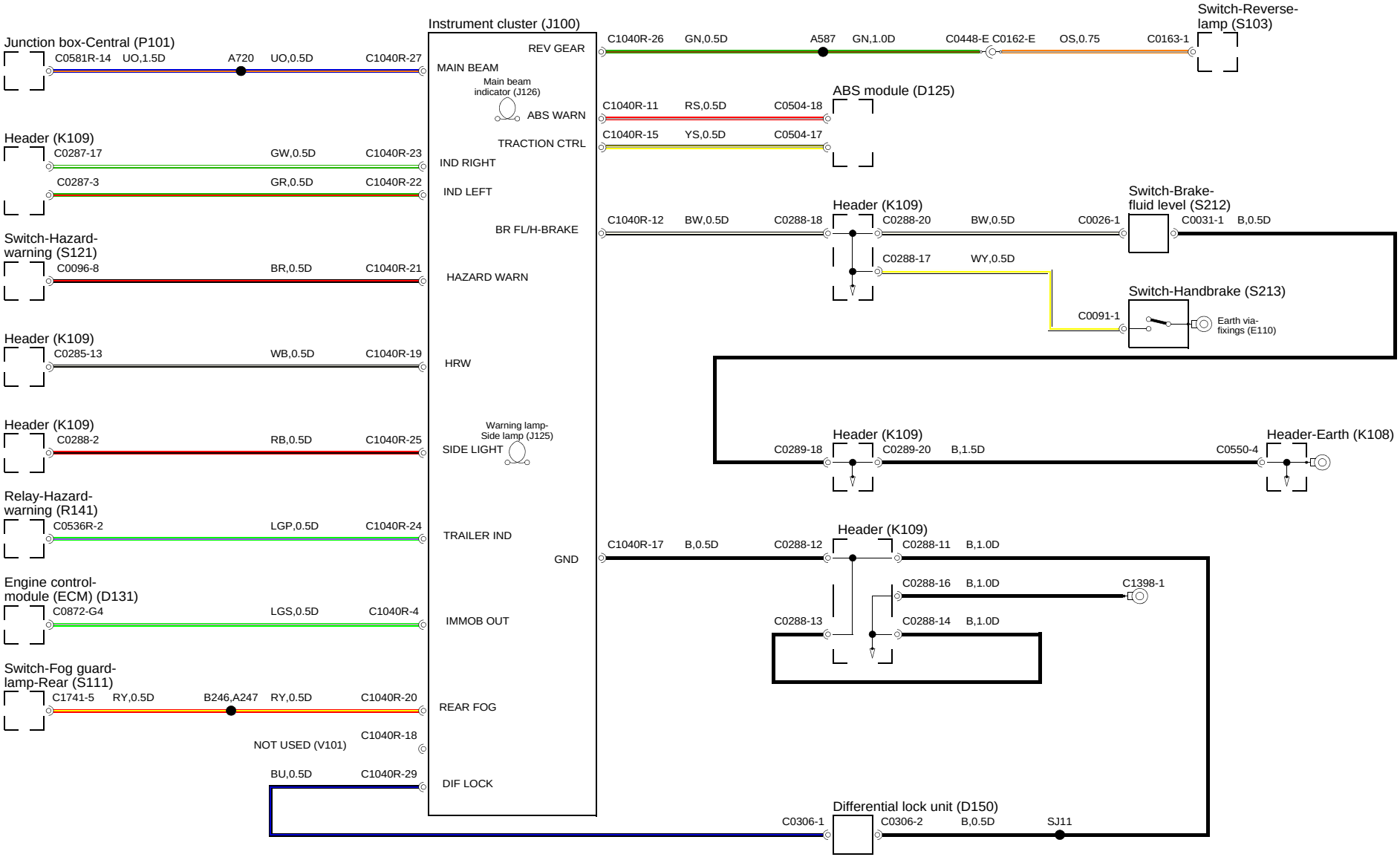
Instrument cluster (J100)
Junction box-Central (P101)
C0581R-14 UO,1.5D A720 UO,0.5D C1040R-27
MAIN BEAM
Main beam indicator (J126)
Header (K109)
C0287-17 GW,0.5D C1040R-23
C0287-3 GR,0.5D C1040R-22
IND RIGHT
IND LEFT
Switch-Hazard-warning (S121)
C0096-8 BR,0.5D C1040R-21
BR FL/H-BRAKE
HAZARD WARN
Header (K109)
C0285-13 WB,0.5D C1040R-19
HRW
Header (K109)
C0288-2 RB,0.5D C1040R-25
Warning lamp-Side lamp (J125)
SIDE LIGHT
Relay-Hazard-warning (R141)
C0536R-2 LGP,0.5D C1040R-24
TRAILER IND
Engine control-module (ECM) (D131)
C0872-G4 LGS,0.5D C1040R-4
IMMOB OUT
Switch-Fog guard-lamp-Rear (S111)
C1741-5 RY,0.5D B246,A247 RY,0.5D C1040R-20
REAR FOG
NOT USED (V101)
C1040R-18
BU,0.5D C1040R-29
DIF LOCK
REV GEAR
C1040R-26 GN,0.5D A587 GN,1.0D C0448-E C0162-E OS,0.75 C0163-1
Switch-Reverse-lamp (S103)
ABS WARN
ABS module (D125)
C1040R-11 RS,0.5D C0504-18
TRACTION CTRL
C1040R-15 YS,0.5D C0504-17
Header (K109)
C1040R-12 BW,0.5D C0288-18 C0288-20 BW,0.5D C0026-1
Switch-Brake-fluid level (S212)
C0031-1 B,0.5D
C0288-17 WY,0.5D
Switch-Handbrake (S213)
C0091-1
Earth via-fixings (E110)
Header (K109)
C0289-18 C0289-20 B,1.5D C0550-4
Header-Earth (K108)
GND
Header (K109)
C1040R-17 B,0.5D C0288-12 C0288-11 B,1.0D
C0288-16 B,1.0D C1398-1
C0288-13 C0288-14 B,1.0D
Differential lock unit (D150)
C0306-1 C0306-2 B,0.5D SJ11

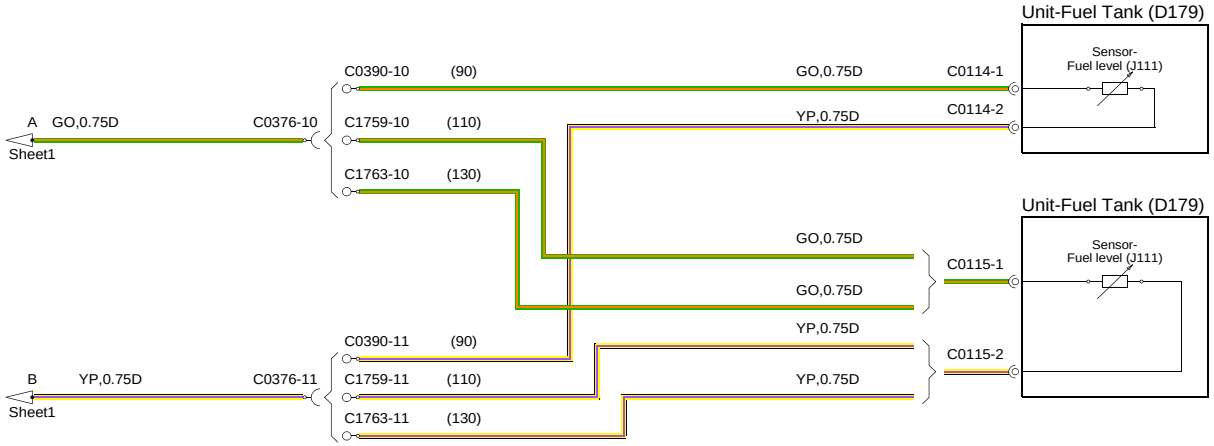
Unit-Fuel Tank (D179)
Sensor-
Fuel level (J111)
C0390-10
(90)
GO,0.75D
C0114-1
A
GO,0.75D
C0376-10
C1759-10
(110)
YP,0.75D
C0114-2
Sheet1
C1763-10
(130)
Unit-Fuel Tank (D179)
GO,0.75D
Sensor-
Fuel level (J111)
C0115-1
GO,0.75D
YP,0.75D
C0390-11
(90)
C0115-2
B
YP,0.75D
C0376-11
C1759-11
(110)
YP,0.75D
Sheet1
C1763-11
(130)